TECHNICAL DATA :

1. SPEAKER (A)
   1) IMPEDANCE : 8ohm ±15%
   2) POWER RATING : ~~10W~~ 25W
   3) SOUND PRESSURE LEVEL : ~~80~~ 93 ±2dB
   4) RESONANCE FREQUENCY : ~~700±15%~~ 200Hz ±50Hz
   5) FREQUENCY RANGE : ~~250~~~10,000Hz 200Hz~13KHz
(A) 2. WEIGHT : ~~1.6kg~~ 2.0kg
3. SURFACE TREATMENT
   1) ITEM : NO. 2
      - COLOR : BLACK
      - COLOR CODE : UT-721N TOP N-1.5,G20
      - MAKER : PPG
   2) ITEM : NO. 1
      - HAIRLINE #180
   3) ITEM : NO. 3
      - S/TREATMENT : Zn PLATING

NOTE

1. BOLT TYPE DESCRIPTION
   (8) — ITEM NO.
2. EMC GASKET LENGTH DESCRIPTION
   (10) -255mm
   — LENGTH
   — ITEM NO.

CONNECTOR PIN ARRANGEMENT

1. SPEAKER+
2. SPEAKER-
3. NC

| NO. | TYPE | SIZE | Q'TY |
|---|---|---|---|
| 8-1 | FLAT HEAD BOLT | M3XL8 | 4 |
| 8-2 | ROUND HEAD BOLT | M4XL8 | 4 |
| | SPRING WASHER | M4XΦ6Xt0.8 | |
| | FLAT WASHER | M4XΦ6.8Xt0.5 | |
| 8-3 | ROUND HEAD BOLT | M3XL14 | 2 |
| | SPRING WASHER | M3XΦ5.8Xt1.0 | |
| | FLAT WASHER | M3XΦ11Xt0.8 | |

| 군번 GROUP NO. | 품번 ITEM | 품 명 DESCRIPTION | 사 양 SPEC | 도 면 번 호 DWG NO. | - | 품번 및 군번 | 중량 . 길이 폭 x 길이 | 표 면 처 리 S/TREATMENT |
|---|---|---|---|---|---|---|---|---|
| 1 | 1 | FRONT PANEL | 304SS, t3 | R1D000403 | | | | HAIRLINE#180 |
| 1 | 2 | REAR COVER | A591-CQ, t=1.0 | R1D000402 | | | | PAINTING |
| 1 | 3 | BRACKET | A366-91, t=1.2 | R1D000401 | | | | Zn PLATING |
| 1 | 4 | SPEAKER | SF-4025C,25W/DAESHIN ENG. ~~EXTERIOR,AMB ELECTECH~~ | R1D000405 | | | | |
| 1 | 5 | MSC CONNECTOR | 231-603/019-000, WAGO | | | | | |
| 1 | 6 | MSC CONNECTOR | 231-103/037-000, WAGO | | | | | |
| 1 | 7 | SEALING GASKET | EPDM CR FORM, t5 | R1D000406 | | | | |
| 1 | 8 | BOLT & NUT LIST | ASS'Y | | | | | |
| 1 | 9 | NAME PLATE | AL,t=1 | R1D000452 | - | 14 | | |
| 4 | 10 | EMC GASKET | SF050010R-C-NA-A, E-Song | | | | | |
| 1 | 11 | BOND | THREE BOND, 1521 | | | | | |
| 1 | 12 | RUBBER SHEET | EPDM, t3.0 | R1D000404 | | | | |
| 1 | 13 | RUBBER GROMET | EPDM, Φ15mm(0.59 inch) | R1D000397 | | | | |
| 1 | 14 | WIRE MESH | 304SS,SCREEN #30, Φ0.3 | R1D001045 | | | | |
| 1 | 15 | ESP WIRING DIAGRAM | ASSY | R1D000498 | | | | |

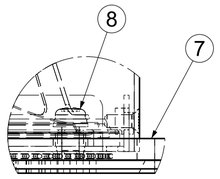


Detail B
Scale: 1:1

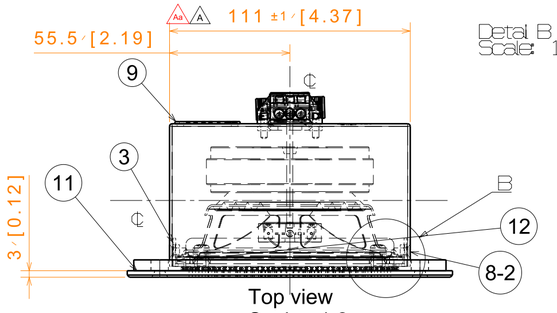


Top view
Scale: 1:2

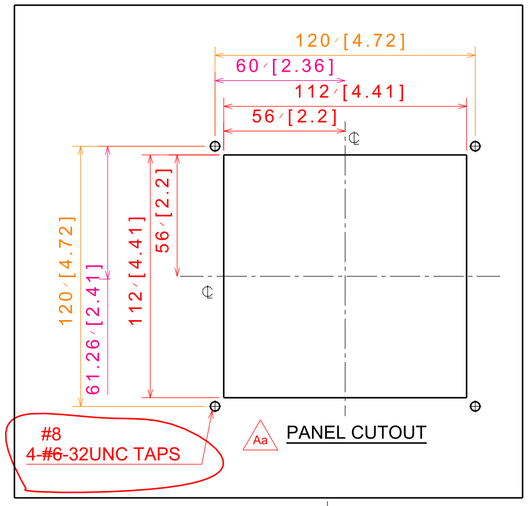


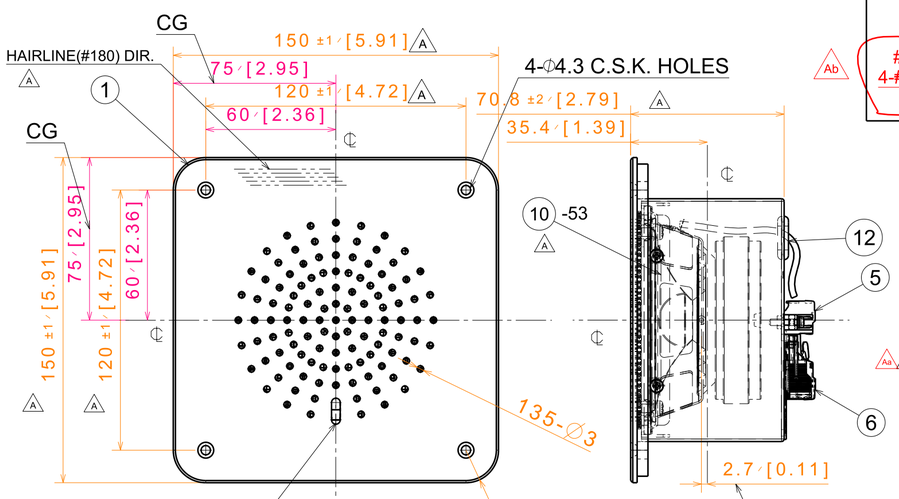


Front view
Scale: 1:2

Right view
Scale: 1:2

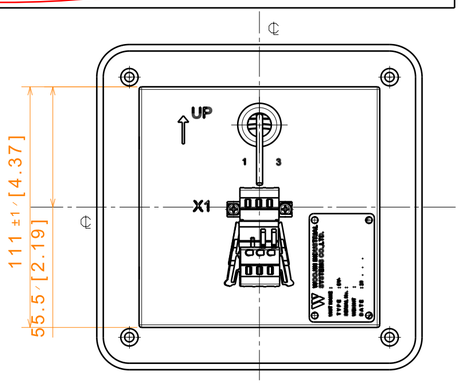


Rear view
Scale: 1:2

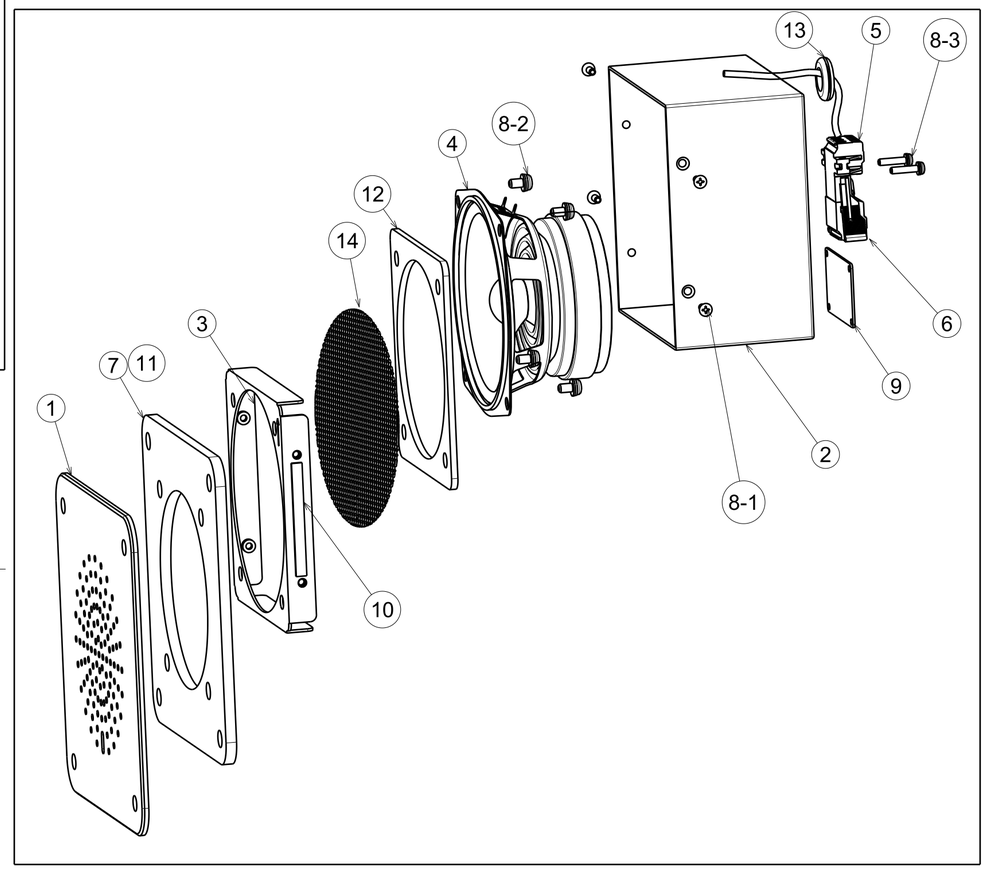


| 개정 CHANGE | | | |
|---|---|---|---|
| 1)Weight changed.<br>2)SPEC. cable length changed.<br>3)Speaker Technial SPEC. & Maker revised.<br>4)Drain hole revised (was 10.5mm)<br>5)Tolerance added. | 2012.03.12 | B.J.JONE | A |
| 1) Dim's & Tolerance changed.<br>2) Panel cutout hole changed. | 2012.11.01 | B.J.JONE | Aa |
| Panel MTG spec. changed. | 2013.03.26 | B.J.JONE | Ab |

| GENERAL TOLERANCE (WMS-C-40201) | | |
|---|---|---|
| DIMENSION | WELDING | MACHING |
| 0.5 ~ 40mm | ±0.3 | ±0.1 |
| 40 ~ 120mm | ±0.5 | ±0.2 |
| 120 ~ 400mm | ±0.8 | ±0.3 |
| 400 ~ 1000mm | ±1.2 | ±0.5 |
| 1000 ~ 2000mm | ±2.0 | ±0.8 |
| 2000 ~ 4000mm | ±3.0 | ±1.2 |
| 4000 ~ 6000mm | ±4.0 | ±2.0 |
| 6000 ~ 8000mm | ±5.0 | ±3.0 |
| 8000 ~ 12500mm | ±7.0 | ±5.0 |
| 12500 ~ 22500mm | ±8.0 | ±7.0 |
| 22500 ~ | ±10.0 | ±9.0 |
| | CASTING | |
| ~ ~ 120mm | ±2.0 | |
| 120 ~ 315mm | ±2.5 | |
| 315 ~ 630mm | ±3.5 | |
| 630 ~ 1250mm | ±5.0 | |
| 1250 ~ 2500mm | ±7.0 | |
| 2500 ~ 5000mm | ±10.0 | |

| | | | | |
|---|---|---|---|---|
| 설계MEMO | DIM. IN mm | 작성일 DATE | 2011.07.10 | 승인 APPROVED |
| | 척도 SCALE | 작성 DRAWN | B.H.KANG | B.J.JONE |
| | 1 / 2 | 설계 DESIGNED | - | |
| 공차 적용기준 : WMS C 40201 | | 검토 CHECKED | J.Y.LEE | |

woojin Industrial Systems Co., Ltd.

DENVER RTD FASTRACKS

EXTERIOR SPEAKER

R1D1473-25858

Ab